7. Five resistors, each of 50 Ω, are connected in a loop as shown below. A 10.0 V battery of zero internal resistance is connected across TR. What is the potential difference between U and R, V_{UR}?

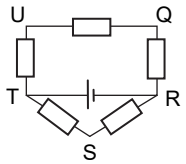

(A) 10.0 V (B) 8.7 V
(C) 6.7 V (D) 3.7 V

8. What is the equivalent resistance between the terminals L and M in the circuit below?

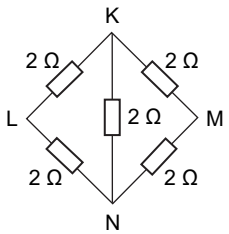

(A) 1 Ω (B) 2 Ω
(C) 3 Ω (D) 4 Ω

9. The resistance of each resistor in the circuit is *R*. What is the effective resistance across XY?

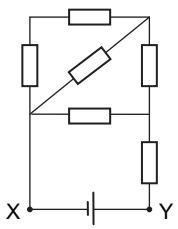

(A) $\frac{R}{2}$ (B) $\frac{2R}{3}$
(C) $\frac{13R}{8}$ (D) $\frac{18R}{3}$

10.

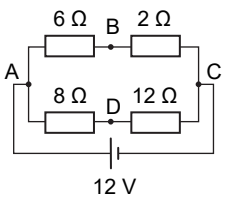

The value of the potential difference across BD is

(A) 3.2 V (B) –4.8 V
(C) –4.2 V (D) 5.0 V

11. Cells that have the same e.m.f. E but different internal resistances are used to power two lamps, either connected in series or parallel, as shown in the figures below. Each lamp may be considered to have a constant resistance of 2 Ω.

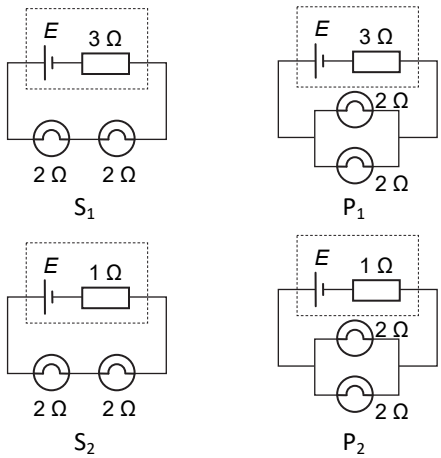

Which of the following gives the combinations in order of decreasing light output?

(A) P_2, S_2, S_1, P_1 (B) P_1, S_1, S_2, P_2
(C) P_2, P_1, S_2, S_1 (D) S_1, S_2, P_1, P_2

12. The diagram shows a network of six resistors. The resistance between A and C is 8.0 Ω. What is the value of resistance *R*?

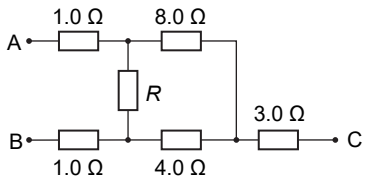

(A) 1.0 Ω (B) 4.0 Ω
(C) 6.0 Ω (D) 8.0 Ω